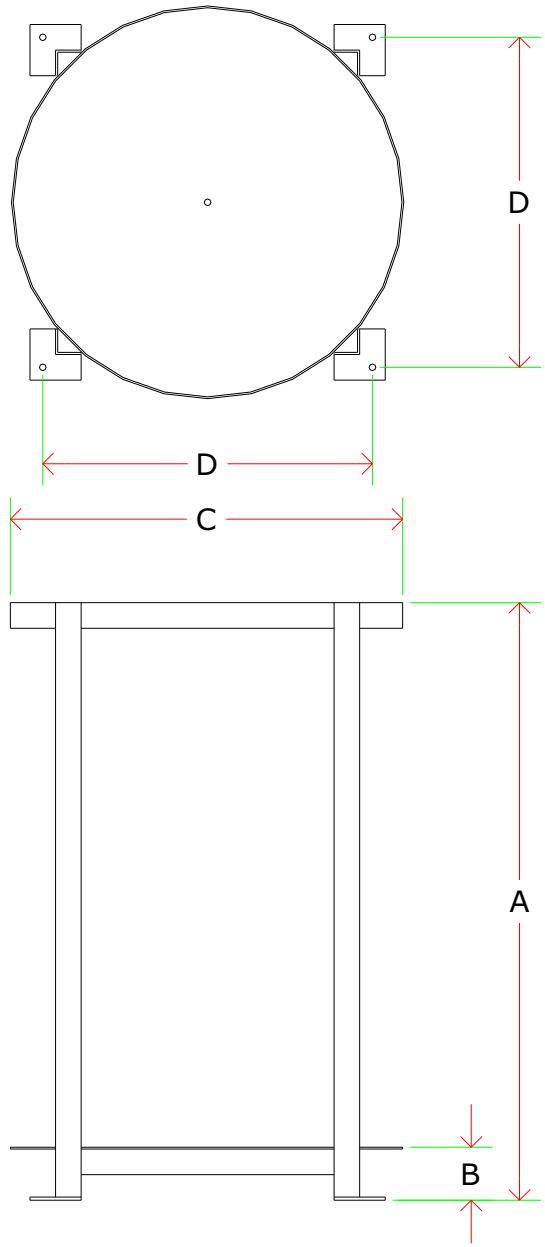

Dimensions:

Model	A	B	C	D	E	F	G	Weight
X	X	X	X	X	X	X	X	X
X	X	X	X	X	X	X	X	X
X	X	X	X	X	X	X	X	X
X	X	X	X	X	X	X	X	X
TS500	64	3	53	41.8	X	X	X	184 lbs
TS360	52	3	49	39	X	X	X	158 lbs
TS275	52	3	43	34.5	X	X	X	89 lbs
TS260	63	3	38	31.3	X	X	X	84 lbs
TS200	52	3	37	29.3	X	X	X	78 lbs
TS150	52	3	32	25.8	X	X	X	68 lbs
TS100	50	3	28	23	X	X	X	58 lbs
TS80	52	3	25	20.8	X	X	X	47 lbs
TS65	44	3	23	19.3	X	X	X	42 lbs
TS55	38	3	23.5	19.8	X	X	X	39 lbs
TS30	32	3	19	16.5	X	X	X	28 lbs
TS17	20	3	19	16.5	X	X	X	25 lbs
TS15	25	3	16	14.5	X	X	X	22 lbs
TS10	24	3	14.5	14.3	X	X	X	19 lbs
TS7.5	20	3	13.5	12.5	X	X	X	17 lbs

Materials of Construction:
Carbon Steel

#	Part	Description
12	X	X
11	X	X
10	X	X
9	X	X
8	X	X
7	X	X
6	X	X
5	X	X
4	X	X
3	X	X
2	X	X
1	X	X

General Treatment Products, Inc.
Phone: 714-257-9165
Fax: 714-257-9215
www.gtpcompany.com

Drwn By:	JC
Date:	12/1/10
Scale:	NTS
Rev:	A

Related Items:
X

Rev.	Description	Date
D	X	X
C	X	X
B	X	X

Notes:
1)

Notice

Description:
Tank Stand (Standard)

Model:
TS xx

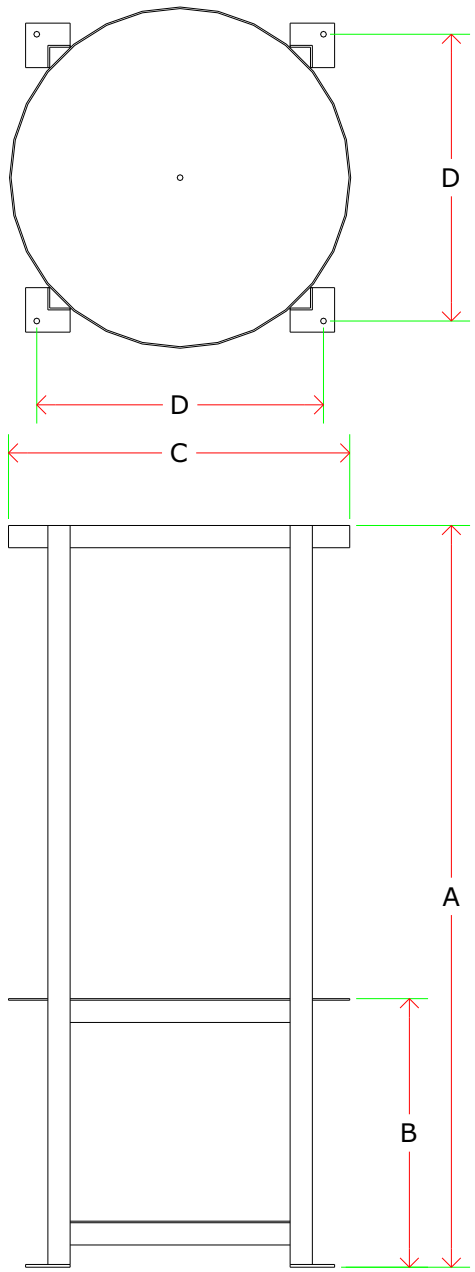

Dimensions:

Model	A	B	C	D	E	F	G	Weight
X	X	X	X	X	X	X	X	X
X	X	X	X	X	X	X	X	X
X	X	X	X	X	X	X	X	X
X	X	X	X	X	X	X	X	X
TS500-B	76	18	53	41.8	X	X	X	250 lbs
TS360-B	64	18	49	39	X	X	X	215 lbs
TS275-B	64	18	43	34.5	X	X	X	133 lbs
TS260-B	75	18	38	31.3	X	X	X	126 lbs
TS200-B	64	18	37	29.3	X	X	X	114 lbs
TS150-B	64	18	32	25.8	X	X	X	98 lbs
TS100-B	62	18	28	23	X	X	X	84 lbs
TS80-B	64	18	25	20.8	X	X	X	65 lbs
TS65-B	56	18	23	19.3	X	X	X	64 lbs
TS55-B	50	18	23.5	19.8	X	X	X	59 lbs
TS30-B	44	18	19	16.5	X	X	X	48 lbs
TS17-B	32	18	19	16.5	X	X	X	48 lbs
TS15-B	37	18	16	14.5	X	X	X	40 lbs
TS10-B	36	18	14.5	14.3	X	X	X	35 lbs
TS7.5-B	32	18	13.5	12.5	X	X	X	32 lbs

Materials of Construction:
High Density Polyethylene

#	Part	Description
12	X	X
11	X	X
10	X	X
9	X	X
8	X	X
7	X	X
6	X	X
5	X	X
4	X	X
3	X	X
2	X	X
1	X	X

General Treatment Products, Inc.
Phone: 714-257-9165
Fax: 714-257-9215
www.gtpcompany.com

Drwn By: JC
Date: 12/1/10
Scale: NTS
Rev: A

Related Items:
X

Rev.	Description	Date
D	X	X
C	X	X
B	X	X

Notes:
1)

Description:
Tank Stand, Bottom Mount

Model:
TS xx-B

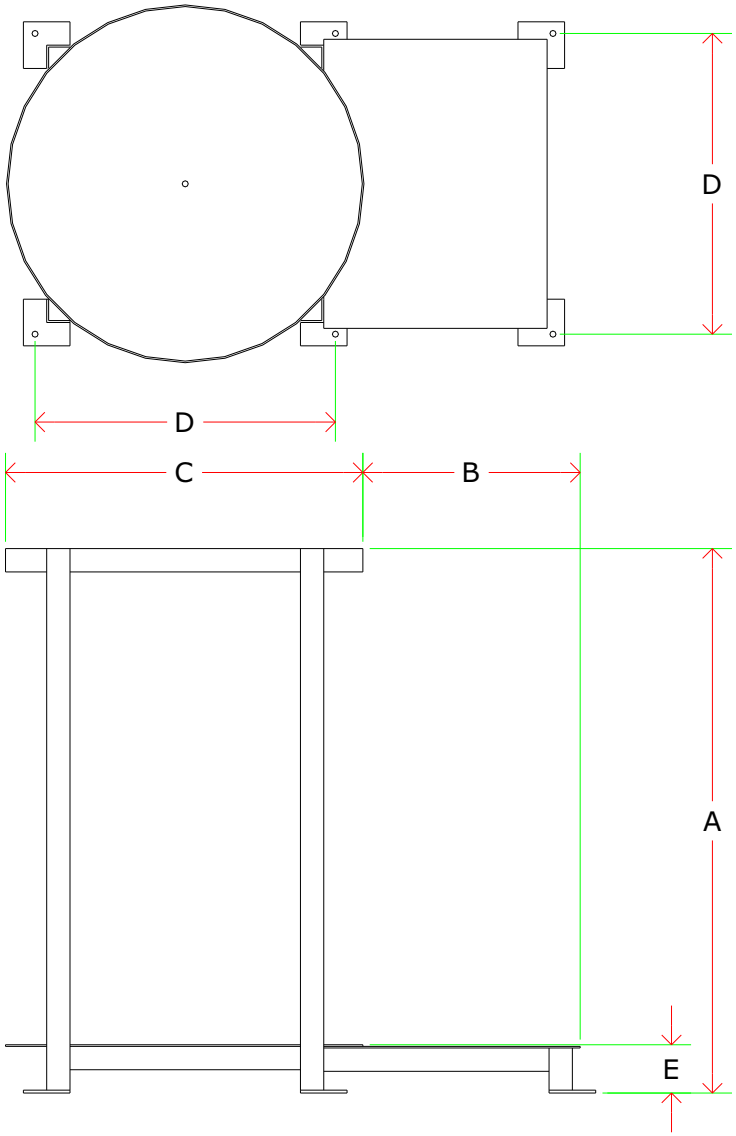

Dimensions:

Model	A	B	C	D	E	F	G	Weight
X	X	X	X	X	X	X	X	X
X	X	X	X	X	X	X	X	X
X	X	X	X	X	X	X	X	X
X	X	X	X	X	X	X	X	X
TS500-S	64	24	53	41.8	3	X	X	265 lbs
TS360-S	52	24	49	39	3	X	X	260 lbs
TS275-S	52	18	43	34.5	3	X	X	136 lbs
TS260-S	63	18	38	31.3	3	X	X	124 lbs
TS200-S	52	18	37	29.3	3	X	X	118 lbs
TS150-S	52	16	32	25.8	3	X	X	102 lbs
TS100-S	50	16	28	23	3	X	X	85 lbs
TS80-S	52	14	25	20.8	3	X	X	72 lbs
TS65-S	44	14	23	19.3	3	X	X	64 lbs
TS55-S	38	14	23.5	19.8	3	X	X	59 lbs
TS30-S	32	14	19	16.5	3	X	X	48 lbs
TS17-S	20	12	19	16.5	3	X	X	42 lbs
TS15-S	25	12	16	14.5	3	X	X	37 lbs
TS10-S	24	12	14.5	14.3	3	X	X	35 lbs
TS7.5-S	20	12	13.5	12.5	3	X	X	33 lbs

Materials of Construction:
High Density Polyethylene

#	Part	Description
12	X	X
11	X	X
10	X	X
9	X	X
8	X	X
7	X	X
6	X	X
5	X	X
4	X	X
3	X	X
2	X	X
1	X	X

General Treatment Products, Inc.
Phone: 714-257-9165
Fax: 714-257-9215
www.gtpcompany.com

Drwn By: JC
Date: 12/1/10
Scale: NTS
Rev: A

Related Items:
X

Rev.	Description	Date
D	X	X
C	X	X
B	X	X

Notes:
1)

Description:
Tank Stand, Side Mount

Model:
TS xx-S

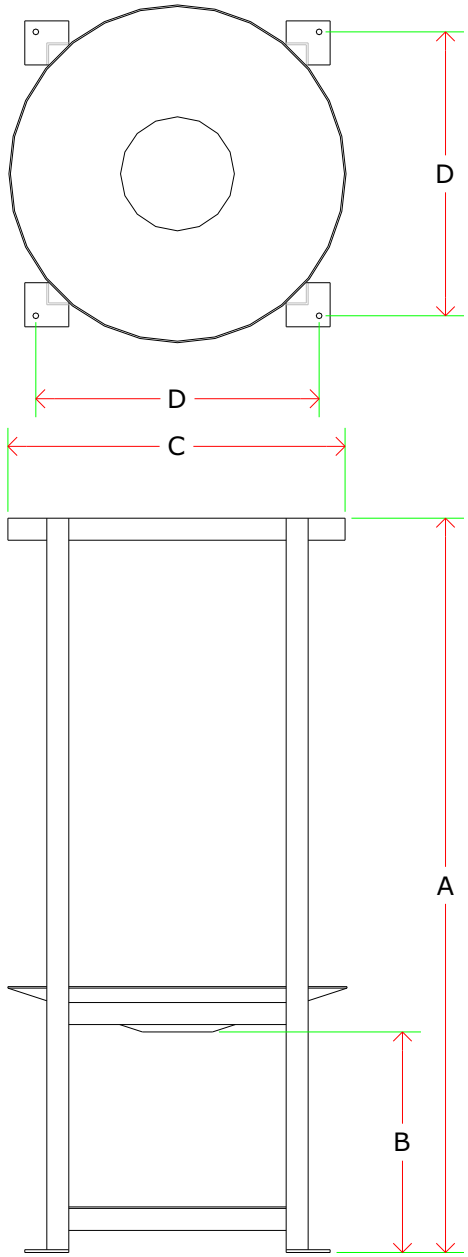

Dimensions:

Model	A	B	C	D	E	F	G	Weight
X	X	X	X	X	X	X	X	X
X	X	X	X	X	X	X	X	X
X	X	X	X	X	X	X	X	X
X	X	X	X	X	X	X	X	X
X	X	X	X	X	X	X	X	X
X	X	X	X	X	X	X	X	X
X	X	X	X	X	X	X	X	X
X	X	X	X	X	X	X	X	X
X	X	X	X	X	X	X	X	X
X	X	X	X	X	X	X	X	X
CTS275	77	18	43.5	35	X	X	X	97 lbs
CTS200	81	18	37	29.3	X	X	X	94 lbs
CTS100	63	18	33	26.5	X	X	X	87 lbs
CTS70	71	18	23.3	19.5	X	X	X	64 lbs
CTS55	71	18	23	19.3	X	X	X	59 lbs
CTS30	61	18	19.5	16.9	X	X	X	50 lbs
CTS15	51	18	19	16.5	X	X	X	42 lbs
CTS10	45	18	19	16.5	X	X	X	36 lbs
CTS5	45	18	13	12.3	X	X	X	31 lbs

Materials of Construction:
High Density Polyethylene

#	Part	Description
12	X	X
11	X	X
10	X	X
9	X	X
8	X	X
7	X	X
6	X	X
5	X	X
4	X	X
3	X	X
2	X	X
1	X	X

General Treatment Products, Inc.
Phone: 714-257-9165
Fax: 714-257-9215
www.gtpcompany.com

Drwn By: JC
Date: 12/1/10
Scale: NTS
Rev: A

Related Items:
X

Rev.	Description	Date
D	X	X
C	X	X
B	X	X

Notes:
1)

Description:
Tank Stand, Conical

Model:
CTS xx