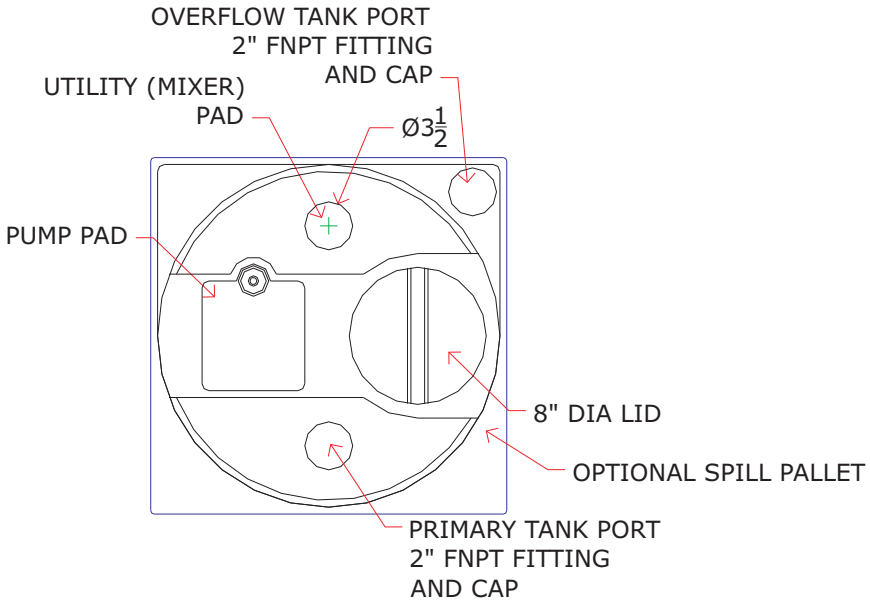

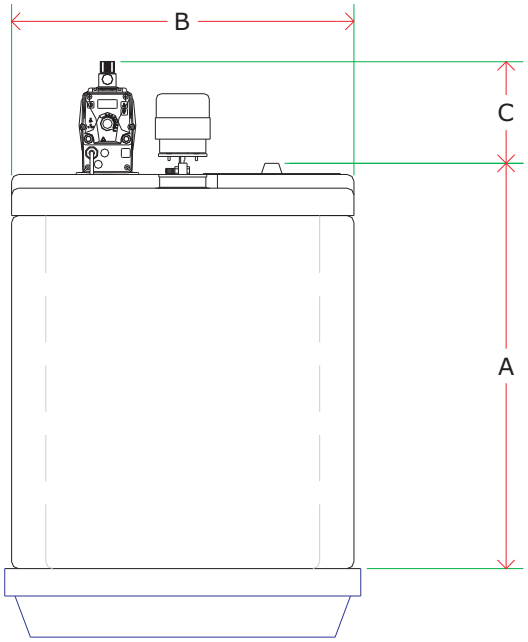

Dimensions:

Model	A	B	C	D	E	F	Wall	Weight
X	X	X	X	X	X	X	X	X
X	X	X	X	X	X	X	X	X
X	X	X	X	X	X	X	X	X
X	X	X	X	X	X	X	X	X
X	X	X	X	X	X	X	X	X
X	X	X	X	X	X	X	X	X
X	X	X	X	X	X	X	X	X
X	X	X	X	X	X	X	X	X
X	X	X	X	X	X	X	X	X
X	X	X	X	X	X	X	X	X
X	X	X	X	X	X	X	X	X
X	X	X	X	X	X	X	X	X
X	X	X	X	X	X	X	X	X
OF 220	63	42	18	X	X	X	X	X
OF 160	60	33	18	X	X	X	X	X
OF 120	50	33	15	X	X	X	X	X
OF 65	39.5	28	15	X	X	X	X	X
OF 35	28.8	25	8	X	X	X	X	X
OF 18	21.5	23	8	X	X	X	X	X

Materials of Construction:
High Density Polyethylene

#	Part	Description
12	X	X
11	X	X
10	X	X
9	X	X
8	X	X
7	X	X
6	X	X
5	X	X
4	X	X
3	X	X
2	X	X
1	X	X

General Treatment Products, Inc.
Phone: 714-257-9165
Fax: 714-257-9215
www.gtpcompany.com

Drwn By:	JC
Date:	12/1/10
Scale:	NTS
Rev:	A

Related Items:
X

Rev.	Description	Date
D	X	X
C	X	X
B	X	X

Notes:
1)

Notice
This drawing and it's content are for the specific use of GTP customers only. It is not to be duplicated or copied without expressed written content of General Treatment Products, Inc. We Reserve the right to modify this drawing with out notice.

Description:
Overflow Chemical Feed Stations16

Model:
CF-OF xx